SANITARY THERMOWELLS

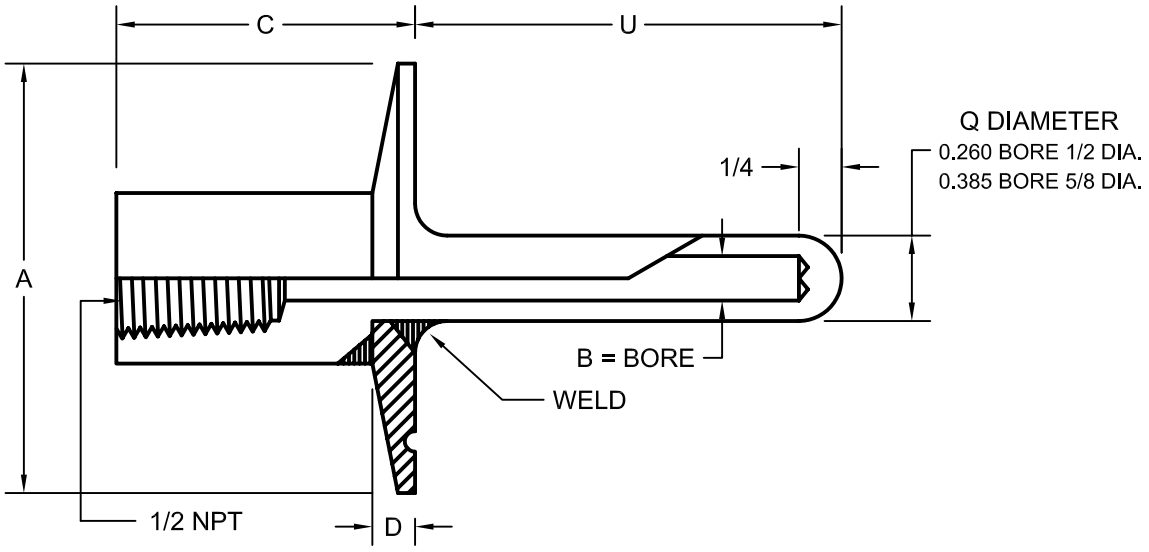

SANITARY = _ _ _ _ _ _

- OTHER INFO
- Q DIAMETER
- U = INSERTION LENGTH
- B = BORE SIZE
- CAP SIZE
- MATERIAL

CAP SIZE	A	D
1 1/2	1.984	0.250
2	2.516	0.250
2 1/2	3.407	0.250
3	3.579	0.250
4	4.682	0.250

STEM LEN.	C	U	BORE SIZE
2 1/2	1 1/4	1 1/2	0.260 OR 0.385
4	1 3/4	2 1/2	
6	1 3/4	4 1/2	
9	1 3/4	7 1/2	